www.albeco.com.pl

HSR

LM Guide Global Standard Size Model HSR

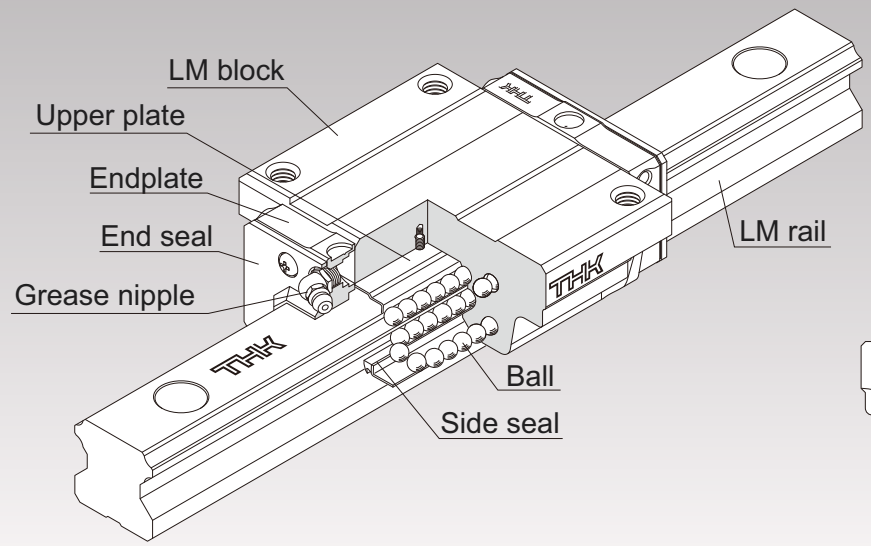

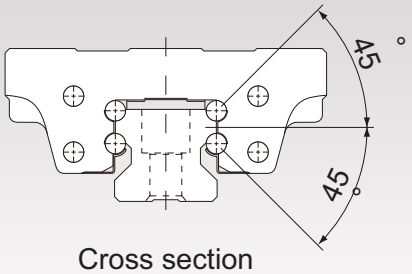

Cross section

Structure and Features

Balls roll in four rows of raceways precision-ground on an LM rail and an LM block, and endplates incorporated in the LM block allow the balls to circulate.
Since retainer plates hold the balls, they do not fall off even if the LM rail is pulled out (except models HSR 8, 10 and 12).
Each row of balls is placed at a contact angle of 45° so that the rated loads applied to the LM block are uniform in the four directions (radial, reverse radial and lateral directions), enabling the LM Guide to be used in all orientations. In addition, the LM block can receive a well-balanced preload, increasing the rigidity in the four directions while maintaining a constant, low friction coefficient. With the low sectional height and the high rigidity design of the LM block, this model achieves highly accurate and stable straight motion.

[4-way Equal Load]

Each row of balls is placed at a contact angle of 45° so that the rated loads applied to the LM block are uniform in the four directions (radial, reverse radial and lateral directions), enabling the LM Guide to be used in all orientations and in extensive applications.

[High Rigidity Type]

Since balls are arranged in four rows in a well-balanced manner, a large preload can be applied and the rigidity in four directions can easily be increased.

[Self-adjustment Capability]

The self-adjustment capability through front-to-front configuration of THK's unique circular-arc grooves (DF set) enables a mounting error to be absorbed even under a preload, thus to achieve highly accurate, smooth straight motion.

[High Durability]

Even under a preload or excessive biased load, differential slip of balls does not occur. As a result, smooth motion, high wear resistance, and long-term maintenance of accuracy are achieved.

[Stainless Steel Type also Available]

A special type which LM block, LM rail and balls are made of stainless steel is also available.

Models HSR-C/XC

Specification Table⇒A1-184

The flange of the LM block has tapped holes. Can be mounted from the top or the bottom. Used in places where the table cannot have through holes for mounting bolts.

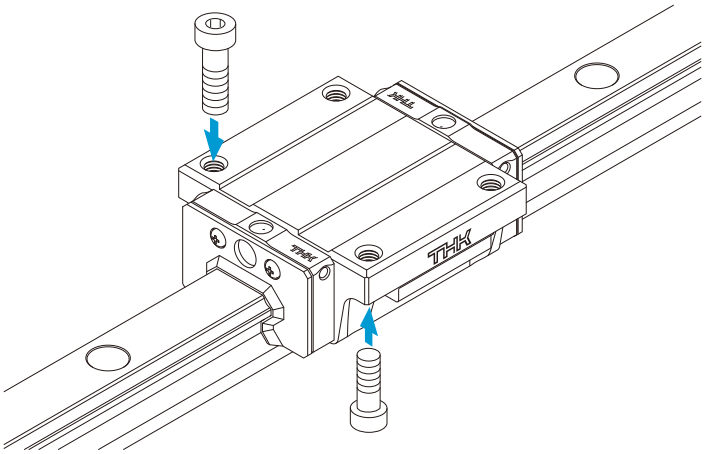

Models HSR-LC/XLC

Specification Table⇒A1-184

The LM block has the same cross-sectional shape as model HSR-C, but has a longer overall LM block length (L) and a greater rated load.

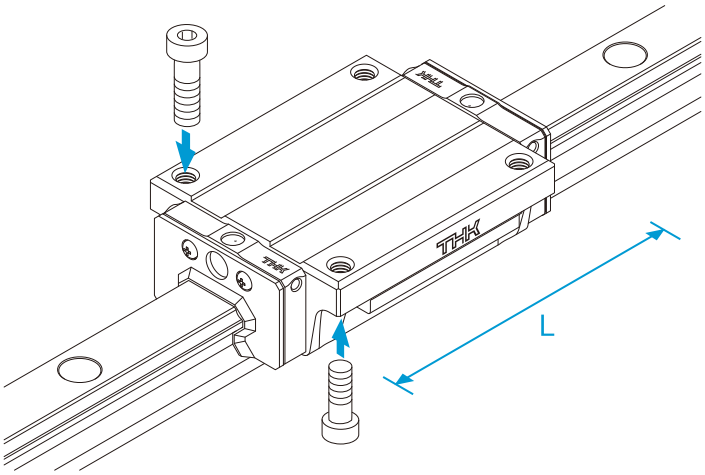

Models HSR-R/XR

Specification Table⇒A1-186 / A1-188

With this type, the LM block has a smaller width (W) and tapped holes. Used in places where the space for table width is limited.

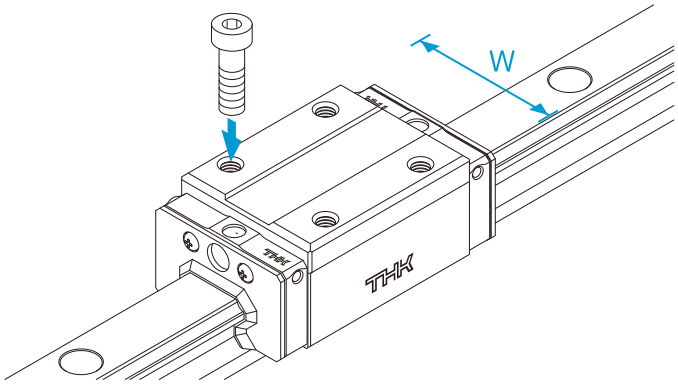

Models HSR-LR/XLR

Specification Table⇒A1-188

The LM block has the same cross-sectional shape as model HSR-R, but has a longer overall LM block length (L) and a greater rated load.

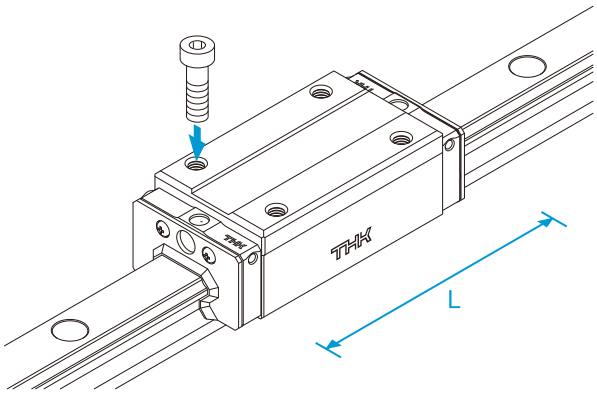

Model HSR-A

Specification Table⇒A1-190

The flange of its LM block has tapped holes.

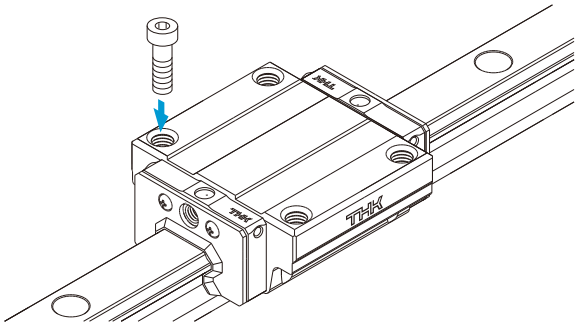

Model HSR-LA

Specification Table⇒A1-190

The LM block has the same cross-sectional shape as model HSR-A, but has a longer overall LM block length (L) and a greater rated load.

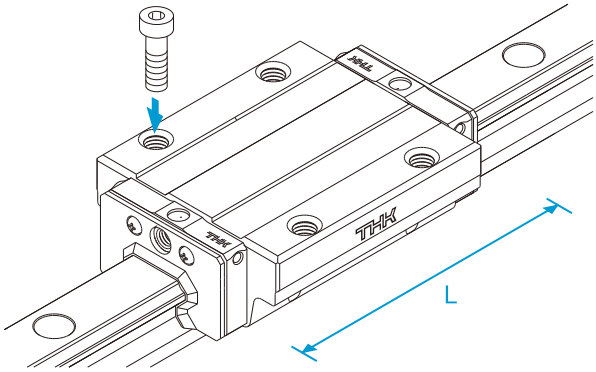

Model HSR-B

Specification Table⇒A1-192

The flange of the LM block has through holes. Used in places where the table cannot have through holes for mounting bolts.

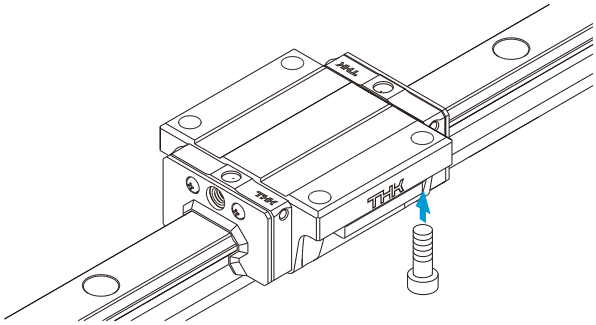

Model HSR-LB

Specification Table⇒A1-192

The LM block has the same cross-sectional shape as model HSR-B, but has a longer overall LM block length (L) and a greater rated load.

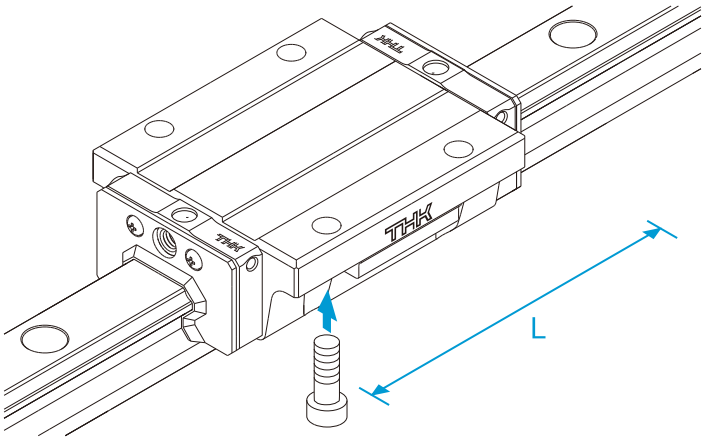

Model HSR-YR

Specification Table⇒A1-194

When using two units of LM Guide facing each other, the previous model required much time in machining the table and had difficulty achieving the desired accuracy and adjusting the clearance. Since model HSR-YR has tapped holes on the side of the LM block, a simpler structure is gained and reduced man-hour and increase in accuracy can be achieved.

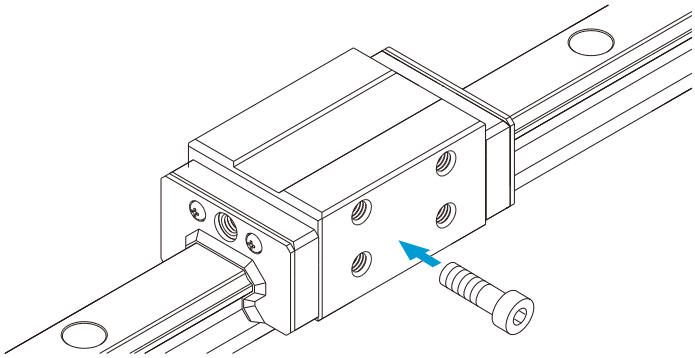

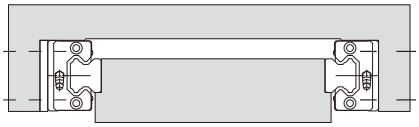

Fig.1 Conventional Structure

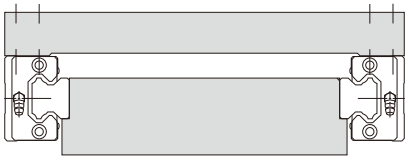

Fig.2 Mounting Structure for Model HSR-YR

Model HSR-CA

Specification Table⇒A1-196

Has six tapped holes on the LM block.

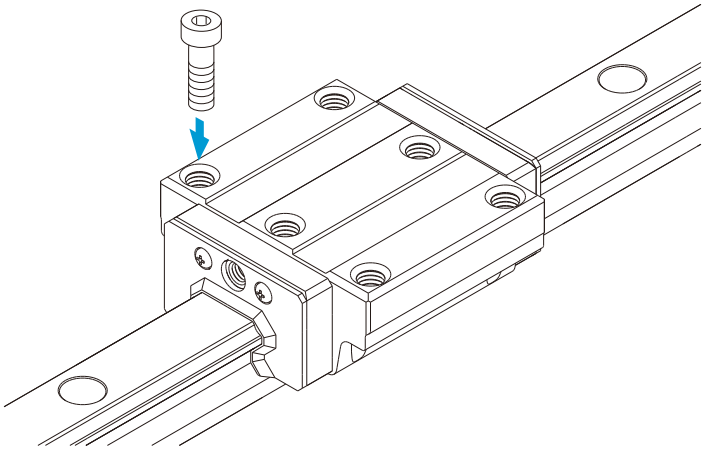

Model HSR-CB

Specification Table⇒A1-198

The LM block has six through holes. Used in places where the table cannot have through holes for mounting bolts.

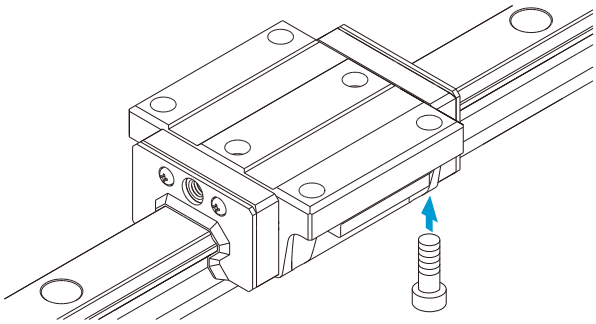

Model HSR-HA

Specification Table⇒A1-196

The LM block has the same cross-sectional shape as model HSR-CA, but has a longer overall LM block length (L) and a greater rated load.

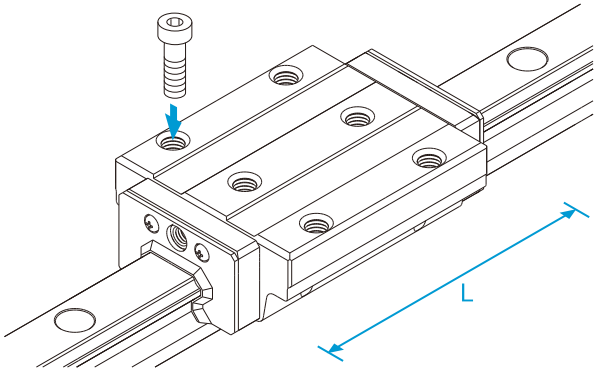

Model HSR-HB

Specification Table⇒A1-198

The LM block has the same cross sectional shape as model HSR-CB, but has a longer overall LM block length (L) and a greater rated load.

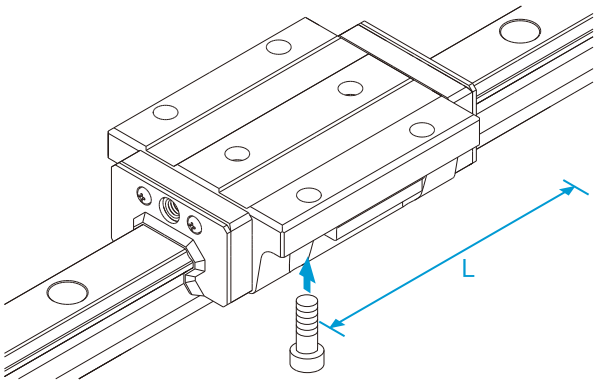

Models HSR 100/120/150 HA/HB/HR

Specification Table⇒A1-200

Large types of model HSR that can be used in large-scale machine tools and building structures.

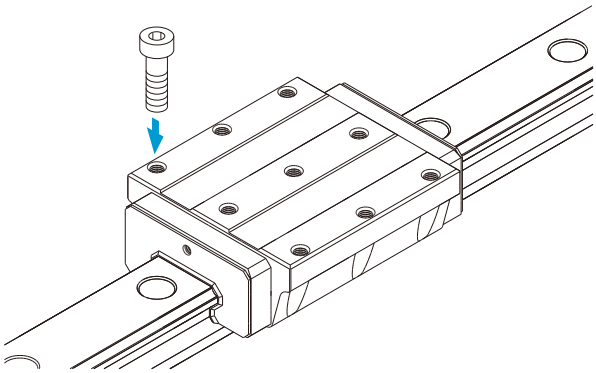

Models HSR-C, HSR-CM, HSR-LC, HSR-LCM, HSR-XC and HSR-XLC

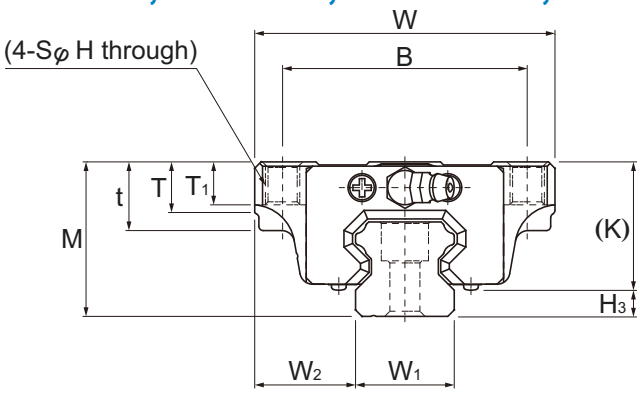

Model No.	Outer dimensions			LM block dimensions												Pilot hole for side nipple			
	Height M	Width W	Length L	B	C	Mounting hole S	H	L_1	t	T	T_1	K	N	E	Grease nipple	e_0	f_0	D_0	H_3
HSR 15C HSR 15CM	24	47	56.6	38	30	M5	4.5	38.8	11	7	7	19.3	4.3	5.5	PB1021B	3.2	3.9	3	4.7
HSR 15LC HSR 15LCM	24	47	74.6	38	30	M5	4.5	56.8	11	7	7	19.3	4.3	5.5	PB1021B	3.2	3.9	3	4.7
HSR 20C HSR 20CM	30	63	74	53	40	M6	5.4	50.8	10	9.5	10	26	5	12	B-M6F	3.1	3.4	3	4
HSR 20LC HSR 20LCM	30	63	90	53	40	M6	5.4	66.8	10	9.5	10	26	5	12	B-M6F	3.1	3.4	3	4
HSR 25C HSR 25CM	36	70	83.1	57	45	M8	6.8	59.5	16	11	10	30.5	6	12	B-M6F	3.5	4	3	5.5
HSR 25LC HSR 25LCM	36	70	102.2	57	45	M8	6.8	78.6	16	11	10	30.5	6	12	B-M6F	3.5	4	3	5.5
HSR 30C HSR 30CM	42	90	98	72	52	M10	8.5	70.4	18	9	10	35	7	12	B-M6F	5.2	6.2	5.2	7
HSR 30LC HSR 30LCM	42	90	120.6	72	52	M10	8.5	93	18	9	10	35	7	12	B-M6F	5.2	6.2	5.2	7
HSR 35C HSR 35CM	48	100	109.4	82	62	M10	8.5	80.4	21	12	13	40.5	8	12	B-M6F	5.5	5.6	5.2	7.5
HSR 35LC HSR 35LCM	48	100	134.8	82	62	M10	8.5	105.8	21	12	13	40.5	8	12	B-M6F	5.5	5.6	5.2	7.5
HSR 45C HSR 45LC	60	120	139 170.8	100	80	M12	10.5	98 129.8	25	13	15	50	10	16	B-PT1/8	6.1	6.6	5.2	10
HSR 55C HSR 55LC	70	140	163 201.1	116	95	M14	12.5	118 156.1	29	13.5	17	57	11	16	B-PT1/8	5.6	7.7	5.2	13
HSR 65XC HSR 65XLC	90	170	190.5 250	142	110	M16	14.5	138.5 198	37	21.5	23	76	19	16	B-PT1/8	6.8	14.6	5.2	14

Model number coding

HSR25 C 2 QZ UU C0 M +1200L P T M - II

- HSR25: Model number
- C: Type of LM block
- 2: No. of LM blocks used on the same rail
- QZ: With QZ Lubricator
- UU: Contamination protection accessory symbol (*1)
- C0: Radial clearance symbol (*2) Normal (No symbol) Light preload (C1) Medium preload (C0)
- M: Stainless steel LM block
- +1200L: LM rail length (in mm)
- P: Accuracy symbol (*3) Normal grade (No Symbol)/High accuracy grade (H) Precision grade (P)/Super precision grade (SP) Ultra precision grade (UP)
- T: Symbol for LM rail jointed use
- M: Stainless steel LM rail
- II: Symbol for No. of rails used on the same plane (*4)

(*1) See contamination protection accessory on A1-496 . (*2) See A1-71 . (*3) See A1-76 . (*4) See A1-13 .

Note) This model number indicates that a single-rail unit constitutes one set. (i.e., required number of sets when 2 rails are used in parallel is 2 at a minimum.)
Those models equipped with QZ Lubricator cannot have a grease nipple. When desiring a grease nipple for a model attached with QZ, contact THK.

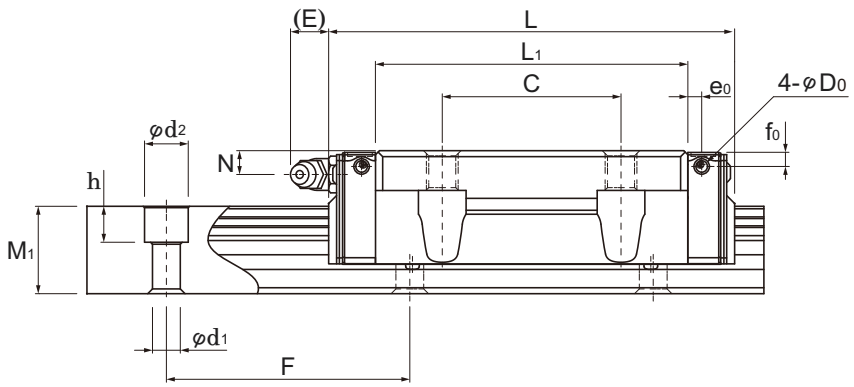

Unit: mm

	LM rail dimensions						Basic load rating		Static permissible moment kN-m *					Mass	
	Width		Height	Pitch		Length*	C	C_0	M_A		M_B		M_C	LM block	LM rail
	W_1 ±0.05	W_2	M_1	F	$d_1 \times d_2 \times h$	Max	kN	kN	1 block	Double blocks	1 block	Double blocks	1 block	kg	kg/m
	15	16	15	60	4.5×7.5×5.3	3000 (1240)	10.9	15.7	0.0945	0.527	0.0945	0.527	0.0998	0.2	1.5
	15	16	15	60	4.5×7.5×5.3	3000 (1240)	14.2	22.9	0.194	0.984	0.194	0.984	0.145	0.29	1.5
	20	21.5	18	60	6×9.5×8.5	3000 (1480)	19.8	27.4	0.218	1.2	0.218	1.2	0.235	0.35	2.3
	20	21.5	18	60	6×9.5×8.5	3000 (1480)	23.9	35.8	0.363	1.87	0.363	1.87	0.307	0.47	2.3
	23	23.5	22	60	7×11×9	3000 (2020)	27.6	36.4	0.324	1.8	0.324	1.8	0.366	0.59	3.3
	23	23.5	22	60	7×11×9	3000 (2020)	35.2	51.6	0.627	3.04	0.627	3.04	0.518	0.75	3.3
	28	31	26	80	9×14×12	3000 (2520)	40.5	53.7	0.599	3.1	0.599	3.1	0.652	1.1	4.8
	28	31	26	80	9×14×12	3000 (2520)	48.9	70.2	0.995	4.89	0.995	4.89	0.852	1.3	4.8
	34	33	29	80	9×14×12	3000 (2520)	53.9	70.2	0.895	4.51	0.895	4.51	1.05	1.6	6.6
	34	33	29	80	9×14×12	3000 (2520)	65	91.7	1.49	7.13	1.49	7.13	1.37	2.0	6.6
	45	37.5	38	105	14×20×17	3090	82.2 100	101 135	1.5 2.59	8.37 13.4	1.5 2.59	8.37 13.4	1.94 2.6	2.8 3.3	11 11
	53	43.5	44	120	16×23×20	3060	121 148	146 194	2.6 4.46	14.1 22.7	2.6 4.46	14.1 22.7	3.43 4.56	4.5 5.7	15.1 15.1
	63	53.5	53	150	18×26×22	3000	195 249	228 323	5.08 9.81	25 45.6	5.08 9.81	25 45.6	6.2 8.79	8.5 10.7	22.5 22.5

Note) The maximum length under "Length*" indicates the standard maximum length of an LM rail. (See A1-202 .)
Static permissible moment* 1 block: the static permissible moment with one LM block
Double blocks: static permissible moment when two LM blocks are in close contact with each other
Overall block length dimension (L) The overall block lengths (L) in the dimension table are for when the contamination protection accessory symbol is UU or SS.
The overall block length (L) will increase if another contamination protection accessory or lubricator is attached.
(See A1-472 or A1-492)
An "M" in the model number indicates the material of the LM block, LM rail, or balls are stainless steel.
Stainless steel products have superior corrosion resistance and environmental resistance.
*The diagram shows the side nipple pilot holes for when a grease nipple is desired for a product with LaCS or a QZ Lubricator
In all other cases, the side nipple pilot holes will not be through holes.
Consult with THK if you desire drilling for grease nipple mounting. (See A1-415.)

Model HSR-RM

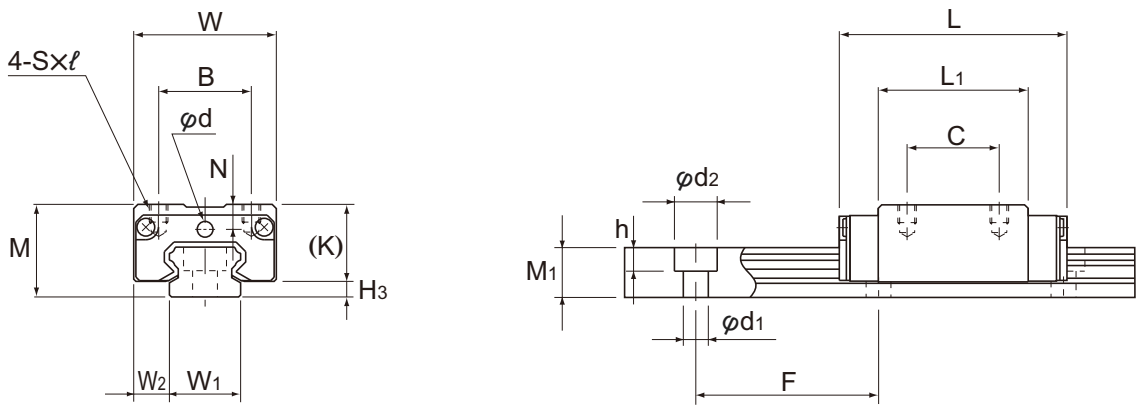

Models HSR8RM and 10RM

Model No.	Outer dimensions			LM block dimensions										
	Height M	Width W	Length L	B	C	S×ℓ	L_1	T	K	N	E	Greasing hole d	Grease nipple	H_3
HSR 8RM	11	16	24	10	10	M2×2.5	15	—	8.9	2.6	—	2.2	—	2.1
HSR 10RM	13	20	31	13	12	M2.6×2.5	20.1	—	10.8	3.5	—	2.5	—	2.2
HSR 12RM	20	27	45	15	15	M4×4.5	30.5	6	16.9	5.2	4	—	PB107	3.1

Model number coding

HSR12 R 2 UU C1 M +670L H T M - II

- HSR12: Model number
- R: Type of LM block
- 2: No. of LM blocks used on the same rail
- UU: Contamination protection accessory symbol (*1)
- C1: Radial clearance symbol (*2) Normal (No symbol) Light preload (C1)
- M: Stainless steel LM block
- +670L: LM rail length (in mm)
- H: Accuracy symbol (*3) Normal grade (No Symbol)/High accuracy grade (H) Precision grade (P)/Super precision grade (SP)
- T: Symbol for LM rail jointed use
- M: Stainless steel LM rail
- II: Symbol for No. of rails used on the same plane (*4)

(*1) See contamination protection accessory on A1-496 . (*2) See A1-71 . (*3) See A1-76 . (*4) See A1-13 .

Note) This model number indicates that a single-rail unit constitutes one set. (i.e., required number of sets when 2 rails are used in parallel is 2 at a minimum.)

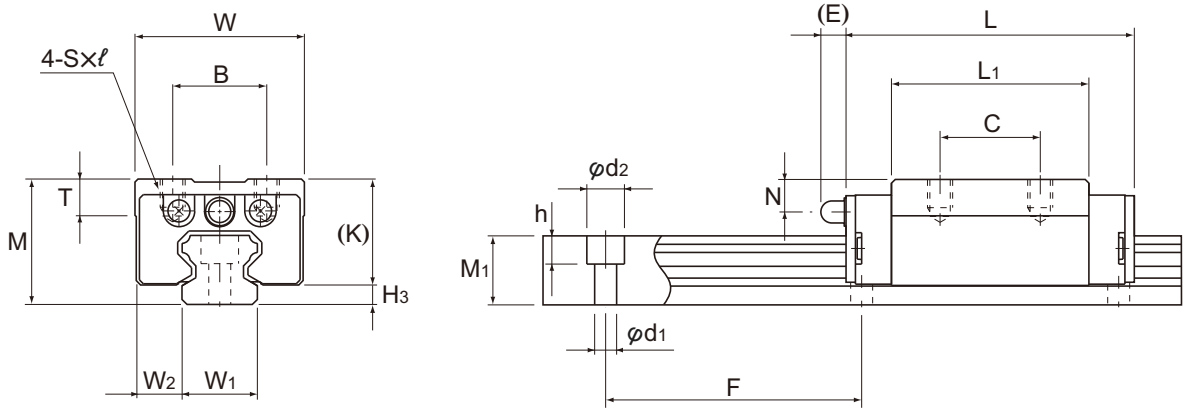

Model HSR12RM

Unit: mm

	LM rail dimensions						Basic load rating		Static permissible moment kN-m *					Mass	
	Width		Height	Pitch		Length*	C	C_0	M_A		M_B		M_C	LM block	LM rail
	W_1 ±0.05	W_2	M_1	F	$d_1 \times d_2 \times h$	Max	kN	kN	1 block	Double blocks	1 block	Double blocks	1 block	kg	kg/m
	8	4	6	20	2.4×4.2×2.3	(975)	1.08	2.16	0.00492	0.0319	0.00492	0.0319	0.00727	0.012	0.3
	10	5	7	25	3.5×6×3.3	(995)	1.96	3.82	0.0123	0.0716	0.0123	0.0716	0.0162	0.025	0.45
	12	7.5	11	40	3.5×6×4.5	(1240)	4.7	8.53	0.0409	0.228	0.0409	0.228	0.0445	0.08	0.83

Note) The maximum length under "Length*" indicates the standard maximum length of an LM rail. (See A1-202 .)
Static permissible moment* 1 block: the static permissible moment with one LM block
Double blocks: static permissible moment when two LM blocks are in close contact with each other
Overall block length dimension (L) The overall block lengths (L) in the dimension table are for when the contamination protection accessory symbol is UU or SS.
The overall block length (L) will increase if another contamination protection accessory or lubricator is attached.
(See A1-472 or A1-492)
An "M" in the model number indicates the material of the LM block, LM rail, or balls are stainless steel.
Stainless steel products have superior corrosion resistance and environmental resistance.

Models HSR-R, HSR-RM, HSR-LR and HSR-LRM

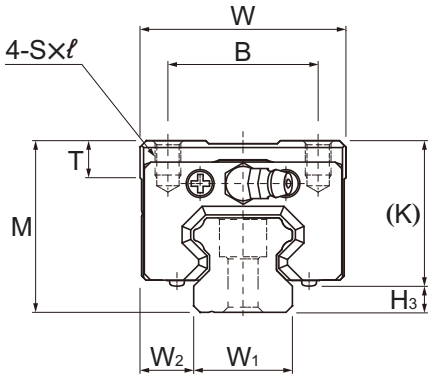

Model No.	Outer dimensions			LM block dimensions									Pilot hole for side nipple			
	Height M	Width W	Length L	B	C	S×ℓ	L_1	T	K	N	E	Grease nipple	e_0	f_0	D_0	H_3
HSR 15R HSR 15RM	28	34	56.6	26	26	M4×5	38.8	6	23.3	8.3	5.5	PB1021B	3.2	3.9	3	4.7
HSR 15LR HSR 15LRM	28	34	74.6	26	34	M4×5	56.8	6	23.3	8.3	5.5	PB1021B	3.2	3.9	3	4.7
HSR 20R HSR 20RM	30	44	74	32	36	M5×6	50.8	8	26	5	12	B-M6F	3.1	3.4	3	4
HSR 20LR HSR 20LRM	30	44	90	32	50	M5×6	66.8	8	26	5	12	B-M6F	3.1	3.4	3	4
HSR 25R HSR 25RM	40	48	83.1	35	35	M6×8	59.5	9	34.5	10	12	B-M6F	3.5	8	3	5.5
HSR 25LR HSR 25LRM	40	48	102.2	35	50	M6×8	78.6	9	34.5	10	12	B-M6F	3.5	8	3	5.5
HSR 30R HSR 30RM	45	60	98	40	40	M8×10	70.4	9	38	10	12	B-M6F	5.2	9.2	5.2	7
HSR 30LR HSR 30LRM	45	60	120.6	40	60	M8×10	93	9	38	10	12	B-M6F	5.2	9.2	5.2	7
HSR 35R HSR 35RM	55	70	109.4	50	50	M8×12	80.4	11.7	47.5	15	12	B-M6F	5.5	12.6	5.2	7.5
HSR 35LR HSR 35LRM	55	70	134.8	50	72	M8×12	105.8	11.7	47.5	15	12	B-M6F	5.5	12.6	5.2	7.5
HSR 45R HSR 45LR	70	86	139 170.8	60	60 80	M10×17	98 129.8	15	60	20	16	B-PT1/8	6.1	16.6	5.2	10
HSR 55R HSR 55LR	80	100	163 201.1	75	75 95	M12×18	118 156.1	20.5	67	21	16	B-PT1/8	5.6	17.7	5.2	13
HSR 65XR HSR 65XLR	90	126	190.5 250	76	70 120	M16×20	138.5 198	23	76	19	16	B-PT1/8	6.8	14.6	5.2	14
HSR 65R HSR 65LR	90	126	186 245.5	76	70 120	M16×20	147 206.5	23	76	19	16	B-PT1/8	—	—	—	14
HSR 85R HSR 85LR	110	156	245.6 303	100	80 140	M18×25	178.6 236	29	94	23	16	B-PT1/8	—	—	—	16

Model number coding

HSR35 R 2 QZ SS C0 M +1400L P T M - II

- HSR35: Model number
- R: Type of LM block
- 2: No. of LM blocks used on the same rail
- QZ: With QZ Lubricator
- SS: Contamination protection accessory symbol (*1)
- C0: Radial clearance symbol (*2) — Normal (No symbol), Light preload (C1), Medium preload (C0)
- M: Stainless steel LM block
- +1400L: LM rail length (in mm)
- P: Accuracy symbol (*3) — Normal grade (No Symbol)/High accuracy grade (H), Precision grade (P)/Super precision grade (SP), Ultra precision grade (UP)
- T: Symbol for LM rail jointed use
- M: Stainless steel LM rail
- II: Symbol for No. of rails used on the same plane (*4)

(*1) See contamination protection accessory on A1-496 . (*2) See A1-71 . (*3) See A1-76 . (*4) See A1-13 .

Note) This model number indicates that a single-rail unit constitutes one set. (i.e., required number of sets when 2 rails are used in parallel is 2 at a minimum.)
Those models equipped with QZ Lubricator cannot have a grease nipple. When desiring a grease nipple for a model attached with QZ, contact THK.

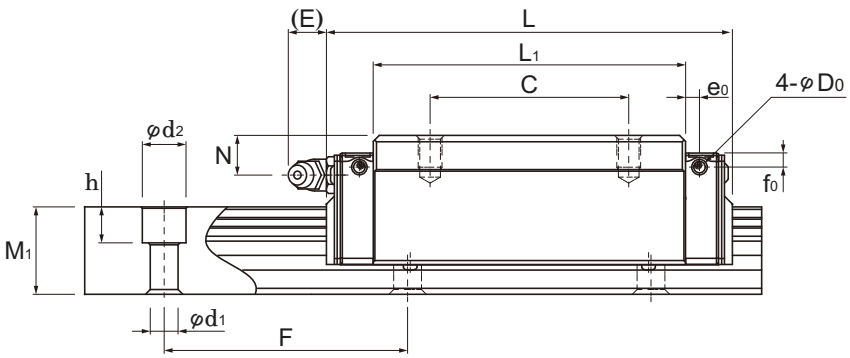

Unit: mm

	LM rail dimensions						Basic load rating		Static permissible moment kN-m *					Mass	
	Width		Height	Pitch		Length*	C	C_0	M_A		M_B		M_C	LM block	LM rail
	W_1 ±0.05	W_2	M_1	F	$d_1 \times d_2 \times h$	Max	kN	kN	1 block	Double blocks	1 block	Double blocks	1 block	kg	kg/m
	15	9.5	15	60	4.5×7.5×5.3	3000 (1240)	10.9	15.7	0.0945	0.527	0.0945	0.527	0.0998	0.18	1.5
	15	9.5	15	60	4.5×7.5×5.3	3000 (1240)	14.2	22.9	0.194	0.984	0.194	0.984	0.145	0.26	1.5
	20	12	18	60	6×9.5×8.5	3000 (1480)	19.8	27.4	0.218	1.2	0.218	1.2	0.235	0.25	2.3
	20	12	18	60	6×9.5×8.5	3000 (1480)	23.9	35.8	0.363	1.87	0.363	1.87	0.307	0.35	2.3
	23	12.5	22	60	7×11×9	3000 (2020)	27.6	36.4	0.324	1.8	0.324	1.8	0.366	0.54	3.3
	23	12.5	22	60	7×11×9	3000 (2020)	35.2	51.6	0.627	3.04	0.627	3.04	0.518	0.67	3.3
	28	16	26	80	9×14×12	3000 (2520)	40.5	53.7	0.599	3.1	0.599	3.1	0.652	0.9	4.8
	28	16	26	80	9×14×12	3000 (2520)	48.9	70.2	0.995	4.89	0.995	4.89	0.852	1.1	4.8
	34	18	29	80	9×14×12	3000 (2520)	53.9	70.2	0.895	4.51	0.895	4.51	1.05	1.5	6.6
	34	18	29	80	9×14×12	3000 (2520)	65	91.7	1.49	7.13	1.49	7.13	1.37	2	6.6
	45	20.5	38	105	14×20×17	3090	82.2 100	101 135	1.5 2.59	8.37 13.4	1.5 2.59	8.37 13.4	1.94 2.6	2.6 3.1	11
	53	23.5	44	120	16×23×20	3060	121 148	146 194	2.6 4.46	14.1 22.7	2.6 4.46	14.1 22.7	3.43 4.56	4.3 5.4	15.1
	63	31.5	53	150	18×26×22	3000	195 249	228 323	5.08 9.81	25 45.6	5.08 9.81	25 45.6	6.2 8.79	7.3 9.7	22.5 22.5
	63	31.5	53	150	18×26×22	3000	195 249	228 323	5.08 9.81	25 45.6	5.08 9.81	25 45.6	6.2 8.79	7.3 9.3	22.5
	85	35.5	65	180	24×35×28	3000	304 367	355 464	10.2 16.9	51.2 81	10.2 16.9	51.2 81	12.8 16.7	13 16	35.2

Note) The maximum length under "Length*" indicates the standard maximum length of an LM rail. (See A1-202 .)
Static permissible moment* 1 block: the static permissible moment with one LM block
Double blocks: static permissible moment when two LM blocks are in close contact with each other
Overall block length dimension (L) The overall block lengths (L) in the dimension table are for when the contamination protection accessory symbol is UU or SS.
The overall block length (L) will increase if another contamination protection accessory or lubricator is attached.
(See A1-472 or A1-492)
An "M" in the model number indicates the material of the LM block, LM rail, or balls are stainless steel.
Stainless steel products have superior corrosion resistance and environmental resistance.
*The diagram shows the side nipple pilot holes for when a grease nipple is desired for a product with LaCS or a QZ Lubricator
In all other cases, the side nipple pilot holes will not be through holes.
Consult with THK if you desire drilling for grease nipple mounting.

Models HSR-A and HSR-AM, Models HSR-LA and HSR-LAM

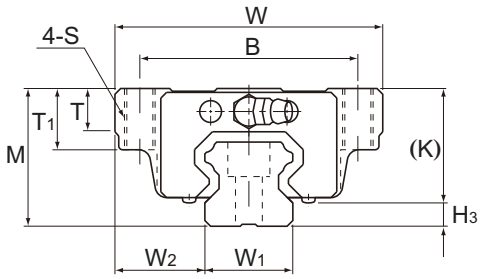

Models HSR15 to 35A/LA/AM/LAM

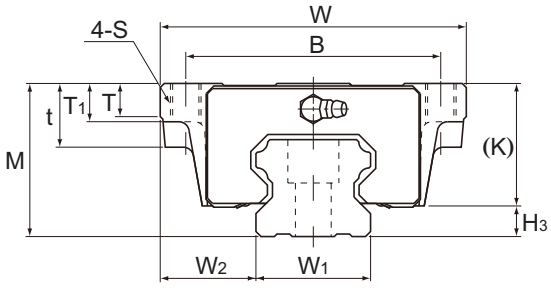

Models HSR45 to 85A/LA

Model No.	Outer dimensions			LM block dimensions											Pilot hole for side nipple			
	Height M	Width W	Length L	B	C	S	L_1	t	T	T_1	K	N	E	Grease nipple	e_0	f_0	D_0	H_3
HSR 15A HSR 15AM	24	47	56.6	38	30	M5	38.8	—	7	11	19.3	4.3	5.5	PB1021B	3.2	3.9	3	4.7
HSR 20A HSR 20AM	30	63	74	53	40	M6	50.8	—	9.5	10	26	5	12	B-M6F	3.1	3.4	3	4
HSR 20LA HSR 20LAM	30	63	90	53	40	M6	66.8	—	9.5	10	26	5	12	B-M6F	3.1	3.4	3	4
HSR 25A HSR 25AM	36	70	83.1	57	45	M8	59.5	—	11	16	30.5	6	12	B-M6F	3.5	4	3	5.5
HSR 25LA HSR 25LAM	36	70	102.2	57	45	M8	78.6	—	11	16	30.5	6	12	B-M6F	3.5	4	3	5.5
HSR 30A HSR 30AM	42	90	98	72	52	M10	70.4	—	9	18	35	7	12	B-M6F	5.2	6.2	5.2	7
HSR 30LA HSR 30LAM	42	90	120.6	72	52	M10	93	—	9	18	35	7	12	B-M6F	5.2	6.2	5.2	7
HSR 35A HSR 35AM	48	100	109.4	82	62	M10	80.4	—	12	21	40.5	8	12	B-M6F	5.5	5.6	5.2	7.5
HSR 35LA HSR 35LAM	48	100	134.8	82	62	M10	105.8	—	12	21	40.5	8	12	B-M6F	5.5	5.6	5.2	7.5
HSR 45A HSR 45LA	60	120	139 170.8	100	80	M12	98 129.8	25	13	15	50	10	16	B-PT1/8	6.1	6.6	5.2	10
HSR 55A HSR 55LA	70	140	163 201.1	116	95	M14	118 156.1	29	13.5	17	57	11	16	B-PT1/8	5.6	7.7	5.2	13
HSR 65A HSR 65LA	90	170	186 245.5	142	110	M16	147 206.5	37	21.5	23	76	19	16	B-PT1/8	—	—	—	14
HSR 85A HSR 85LA	110	215	245.6 303	185	140	M20	178.6 236	55	28	30	94	23	16	B-PT1/8	—	—	—	16

Model number coding

HSR25 A 2 QZ UU C0 M +1200L P T M - II

- HSR25: Model number
- A: Type of LM block
- 2: No. of LM blocks used on the same rail
- QZ: With QZ Lubricator
- UU: Radial clearance symbol (*2) Normal (No symbol) Light preload (C1) Medium preload (C0)
- C0: Contamination protection accessory symbol (*1)
- M: Stainless steel LM block
- +1200L: LM rail length (in mm)
- P: Accuracy symbol (*3) Normal grade (No Symbol)/High accuracy grade (H) Precision grade (P)/Super precision grade (SP) Ultra precision grade (UP)
- T: Symbol for LM rail jointed use
- M: Stainless steel LM rail
- II: Symbol for No. of rails used on the same plane (*4)

(*1) See contamination protection accessory on A1-496 . (*2) See A1-71 . (*3) See A1-76 . (*4) See A1-13 .

Note) This model number indicates that a single-rail unit constitutes one set. (i.e., required number of sets when 2 rails are used in parallel is 2 at a minimum.)
Those models equipped with QZ Lubricator cannot have a grease nipple. When desiring a grease nipple for a model attached with QZ, contact THK.

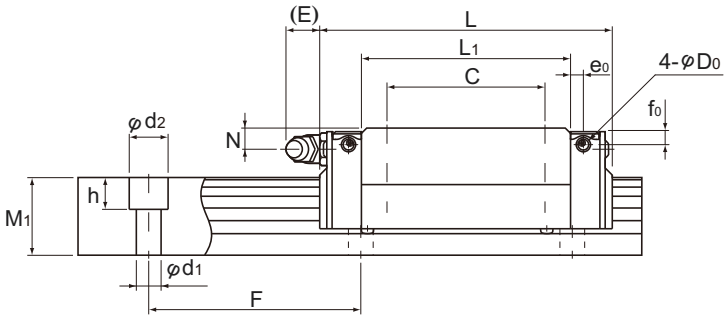

Unit: mm

	LM rail dimensions						Basic load rating		Static permissible moment kN-m *					Mass	
	Width		Height	Pitch		Length*	C	C_0	M_A		M_B		M_C	LM block	LM rail
	W_1 ±0.05	W_2	M_1	F	$d_1 \times d_2 \times h$	Max	kN	kN	1 block	Double blocks	1 block	Double blocks	1 block	kg	kg/m
	15	16	15	60	4.5×7.5×5.3	3000 (1240)	10.9	15.7	0.0945	0.527	0.0945	0.527	0.0998	0.2	1.5
	20	21.5	18	60	6×9.5×8.5	3000 (1480)	19.8	27.4	0.218	1.2	0.218	1.2	0.235	0.35	2.3
	20	21.5	18	60	6×9.5×8.5	3000 (1480)	23.9	35.8	0.363	1.87	0.363	1.87	0.307	0.47	2.3
	23	23.5	22	60	7×11×9	3000 (2020)	27.6	36.4	0.324	1.8	0.324	1.8	0.366	0.59	3.3
	23	23.5	22	60	7×11×9	3000 (2020)	35.2	51.6	0.627	3.04	0.627	3.04	0.518	0.75	3.3
	28	31	26	80	9×14×12	3000 (2520)	40.5	53.7	0.599	3.1	0.599	3.1	0.652	1.1	4.8
	28	31	26	80	9×14×12	3000 (2520)	48.9	70.2	0.995	4.89	0.995	4.89	0.852	1.3	4.8
	34	33	29	80	9×14×12	3000 (2520)	53.9	70.2	0.895	4.51	0.895	4.51	1.05	1.6	6.6
	34	33	29	80	9×14×12	3000 (2520)	65	91.7	1.49	7.13	1.49	7.13	1.37	2	6.6
	45	37.5	38	105	14×20×17	3090	82.2 100	101 135	1.5 2.59	8.37 13.4	1.5 2.59	8.37 13.4	1.94 2.6	2.8 3.3	11
	53	43.5	44	120	16×23×20	3060	121 148	146 194	2.6 4.46	14.1 22.7	2.6 4.46	14.1 22.7	3.43 4.56	4.5 5.7	15.1
	63	53.5	53	150	18×26×22	3000	195 249	228 323	5.08 9.81	25 45.6	5.08 9.81	25 45.6	6.2 8.79	8.5 10.7	22.5
	85	65	65	180	24×35×28	3000	304 367	355 464	10.2 16.9	51.2 81	10.2 16.9	51.2 81	12.8 16.7	17 23	35.2

Note) The maximum length under "Length*" indicates the standard maximum length of an LM rail. (See A1-202 .)
Static permissible moment* 1 block: the static permissible moment with one LM block
Double blocks: static permissible moment when two LM blocks are in close contact with each other
Overall block length dimension (L) The overall block lengths (L) in the dimension table are for when the contamination protection accessory symbol is UU or SS.
The overall block length (L) will increase if another contamination protection accessory or lubricator is attached.
(See A1-472 or A1-492)
An "M" in the model number indicates the material of the LM block, LM rail, or balls are stainless steel.
Stainless steel products have superior corrosion resistance and environmental resistance.
*The diagram shows the side nipple pilot holes for when a grease nipple is desired for a product with LaCS or a QZ Lubricator
In all other cases, the side nipple pilot holes will not be through holes.
Consult with THK if you desire drilling for grease nipple mounting.

Models HSR-B, HSR-BM, HSR-LB and HSR-LBM

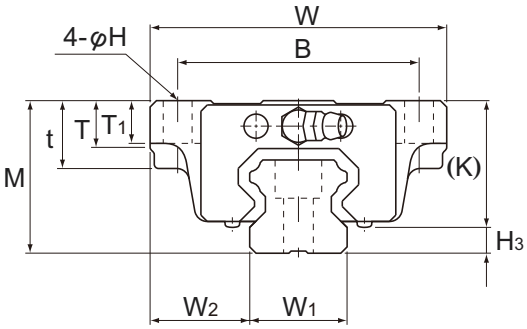

Model No.	Outer dimensions			LM block dimensions											Pilot hole for side nipple			
	Height M	Width W	Length L	B	C	H	L_1	t	T	T_1	K	N	E	Grease nipple	e_0	f_0	D_0	H_3
HSR 15B HSR 15BM	24	47	56.6	38	30	4.5	38.8	11	7	7	19.3	4.3	5.5	PB1021B	3.2	3.9	3	4.7
HSR 20B HSR 20BM	30	63	74	53	40	6	50.8	10	9.5	10	26	5	12	B-M6F	3.1	3.4	3	4
HSR 20LB HSR 20LBM	30	63	90	53	40	6	66.8	10	9.5	10	26	5	12	B-M6F	3.1	3.4	3	4
HSR 25B HSR 25BM	36	70	83.1	57	45	7	59.5	16	11	10	30.5	6	12	B-M6F	3.5	4	3	5.5
HSR 25LB HSR 25LBM	36	70	102.2	57	45	7	78.6	16	11	10	30.5	6	12	B-M6F	3.5	4	3	5.5
HSR 30B HSR 30BM	42	90	98	72	52	9	70.4	18	9	10	35	7	12	B-M6F	5.2	6.2	5.2	7
HSR 30LB HSR 30LBM	42	90	120.6	72	52	9	93	18	9	10	35	7	12	B-M6F	5.2	6.2	5.2	7
HSR 35B HSR 35BM	48	100	109.4	82	62	9	80.4	21	12	13	40.5	8	12	B-M6F	5.5	5.6	5.2	7.5
HSR 35LB HSR 35LBM	48	100	134.8	82	62	9	105.8	21	12	13	40.5	8	12	B-M6F	5.5	5.6	5.2	7.5
HSR 45B HSR 45LB	60	120	139 170.8	100	80	11	98 129.8	25	13	15	50	10	16	B-PT1/8	6.1	6.6	5.2	10
HSR 55B HSR 55LB	70	140	163 201.1	116	95	14	118 156.1	29	13.5	17	57	11	16	B-PT1/8	5.6	7.7	5.2	13
HSR 65B HSR 65LB	90	170	186 245.5	142	110	16	147 206.5	37	21.5	23	76	19	16	B-PT1/8	—	—	—	14
HSR 85B HSR 85LB	110	215	245.6 303	185	140	18	178.6 236	55	28	30	94	23	16	B-PT1/8	—	—	—	16

Model number coding

HSR25 B 2 QZ UU C0 M +1200L P T M - II

- HSR25: Model number
- B: Type of LM block
- 2: No. of LM blocks used on the same rail
- QZ: With QZ Lubricator
- UU: Contamination protection accessory symbol (*1)
- C0: Radial clearance symbol (*2)
  - Normal (No symbol)
  - Light preload (C1)
  - Medium preload (C0)
- M: Stainless steel LM block
- +1200L: LM rail length (in mm)
- P: Accuracy symbol (*3)
  - Normal grade (No Symbol)/High accuracy grade (H)
  - Precision grade (P)/Super precision grade (SP)
  - Ultra precision grade (UP)
- T: Symbol for LM rail jointed use
- M: Stainless steel LM rail
- II: Symbol for No. of rails used on the same plane (*4)

(*1) See contamination protection accessory on A1-496 . (*2) See A1-71 . (*3) See A1-76 . (*4) See A1-13 .

Note) This model number indicates that a single-rail unit constitutes one set. (i.e., required number of sets when 2 rails are used in parallel is 2 at a minimum.)
Those models equipped with QZ Lubricator cannot have a grease nipple. When desiring a grease nipple for a model attached with QZ, contact THK.

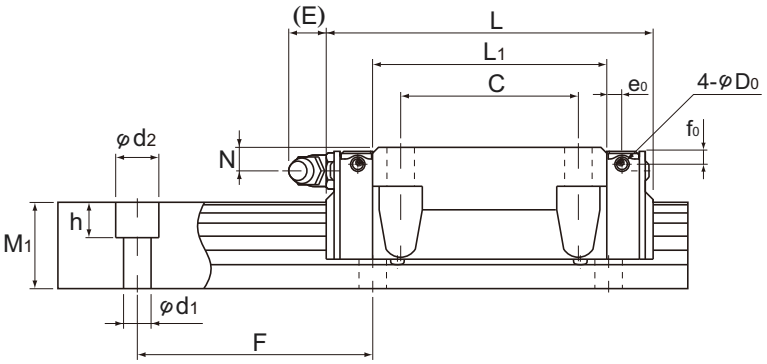

Unit: mm

	LM rail dimensions						Basic load rating		Static permissible moment kN-m *					Mass	
	Width		Height	Pitch		Length*	C	C_0	M_A		M_B		M_C	LM block	LM rail
	W_1 ±0.05	W_2	M_1	F	$d_1 \times d_2 \times h$	Max	kN	kN	1 block	Double blocks	1 block	Double blocks	1 block	kg	kg/m
	15	16	15	60	4.5×7.5×5.3	3000 (1240)	10.9	15.7	0.0945	0.527	0.0945	0.527	0.0998	0.2	1.5
	20	21.5	18	60	6×9.5×8.5	3000 (1480)	19.8	27.4	0.218	1.2	0.218	1.2	0.235	0.35	2.3
	20	21.5	18	60	6×9.5×8.5	3000 (1480)	23.9	35.8	0.363	1.87	0.363	1.87	0.307	0.47	2.3
	23	23.5	22	60	7×11×9	3000 (2020)	27.6	36.4	0.324	1.8	0.324	1.8	0.366	0.59	3.3
	23	23.5	22	60	7×11×9	3000 (2020)	35.2	51.6	0.627	3.04	0.627	3.04	0.518	0.75	3.3
	28	31	26	80	9×14×12	3000 (2520)	40.5	53.7	0.599	3.1	0.599	3.1	0.652	1.1	4.8
	28	31	26	80	9×14×12	3000 (2520)	48.9	70.2	0.995	4.89	0.995	4.89	0.852	1.3	4.8
	34	33	29	80	9×14×12	3000 (2520)	53.9	70.2	0.895	4.51	0.895	4.51	1.05	1.6	6.6
	34	33	29	80	9×14×12	3000 (2520)	65	91.7	1.49	7.13	1.49	7.13	1.37	2	6.6
	45	37.5	38	105	14×20×17	3090	82.2 100	101 135	1.5 2.59	8.37 13.4	1.5 2.59	8.37 13.4	1.94 2.6	2.8 3.3	11
	53	43.5	44	120	16×23×20	3060	121 148	146 194	2.6 4.46	14.1 22.7	2.6 4.46	14.1 22.7	3.43 4.56	4.5 5.7	15.1
	63	53.5	53	150	18×26×22	3000	195 249	228 323	5.08 9.81	25 45.6	5.08 9.81	25 45.6	6.2 8.79	8.5 10.7	22.5
	85	65	65	180	24×35×28	3000	304 367	355 464	10.2 16.9	51.2 81	10.2 16.9	51.2 81	12.8 16.7	17 23	35.2

Note) The maximum length under "Length*" indicates the standard maximum length of an LM rail. (See A1-202 .)
Static permissible moment* 1 block: the static permissible moment with one LM block
Double blocks: static permissible moment when two LM blocks are in close contact with each other
Overall block length dimension (L) The overall block lengths (L) in the dimension table are for when the contamination protection accessory symbol is UU or SS.
The overall block length (L) will increase if another contamination protection accessory or lubricator is attached.
(See A1-472 or A1-492)
An "M" in the model number indicates the material of the LM block, LM rail, or balls are stainless steel.
Stainless steel products have superior corrosion resistance and environmental resistance.
*The diagram shows the side nipple pilot holes for when a grease nipple is desired for a product with LaCS or a QZ Lubricator
In all other cases, the side nipple pilot holes will not be through holes.
Consult with THK if you desire drilling for grease nipple mounting.

Models HSR-YR and HSR-YRM

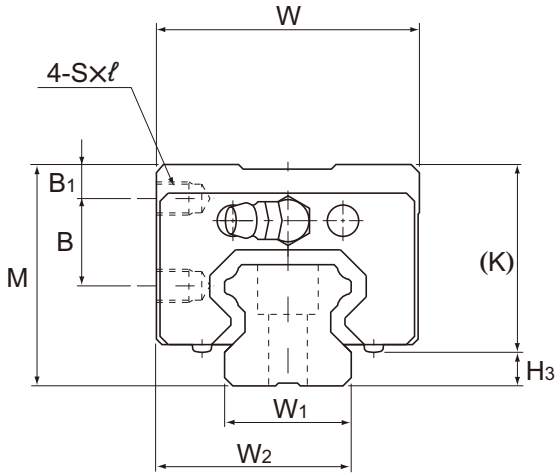

Model No.	Outer dimensions			LM block dimensions									
	Height M	Width W	Length L	B_1	B	C	S×ℓ	L_1	K	N	E	Grease nipple	H_3
HSR 15YR HSR 15YRM	28	33.5	56.6	4.3	11.5	18	M4×5	38.8	23.3	8.3	5.5	PB1021B	4.7
HSR 20YR HSR 20YRM	30	43.5	74	4	11.5	25	M5×6	50.8	26	5	12	B-M6F	4
HSR 25YR HSR 25YRM	40	47.5	83.1	6	16	30	M6×6	59.5	34.5	10	12	B-M6F	5.5
HSR 30YR HSR 30YRM	45	59.5	98	8	16	40	M6×9	70.4	38	10	12	B-M6F	7
HSR 35YR HSR 35YRM	55	69.5	109.4	8	23	43	M8×10	80.4	47.5	15	12	B-M6F	7.5
HSR 45YR	70	85.5	139	10	30	55	M10×14	98	60	20	16	B-PT1/8	10
HSR 55YR	80	99.5	163	12	32	70	M12×15	118	67	21	16	B-PT1/8	13
HSR 65YR	90	124.5	186	12	35	85	M16×22	147	76	19	16	B-PT1/8	14

Model number coding

HSR25 YR 2 UU C0 M +1200L P T M - II

- HSR25: Model number
- YR: Type of LM block
- 2: No. of LM blocks used on the same rail
- UU: Contamination protection accessory symbol (*1)
- C0: Radial clearance symbol (*2) Normal (No symbol) Light preload (C1) Medium preload (C0)
- M: Stainless steel LM block
- +1200L: LM rail length (in mm)
- P: Accuracy symbol (*3) Normal grade (No Symbol)/High accuracy grade (H) Precision grade (P)/Super precision grade (SP) Ultra precision grade (UP)
- T: Symbol for LM rail jointed use
- M: Stainless steel LM rail
- II: Symbol for No. of rails used on the same plane (*4)

(*1) See contamination protection accessory on A1-496 . (*2) See A1-71 . (*3) See A1-76 . (*4) See A1-13 .

Note) This model number indicates that a single-rail unit constitutes one set. (i.e., required number of sets when 2 rails are used in parallel is 2 at a minimum.)

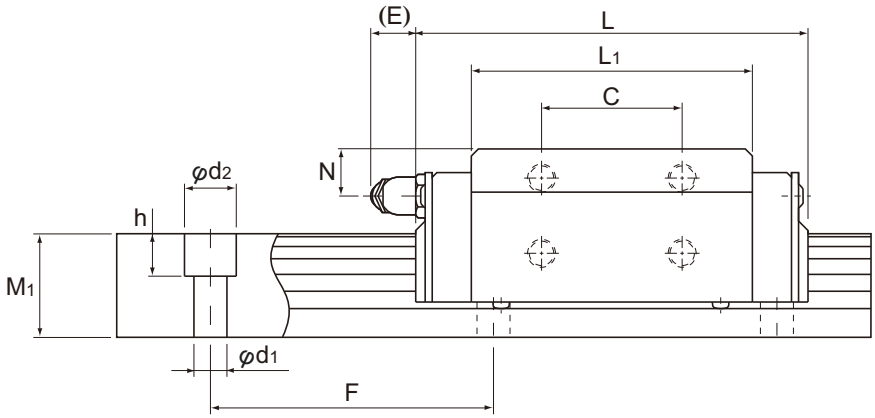

Unit: mm

	LM rail dimensions						Basic load rating		Static permissible moment kN-m*					Mass	
	Width		Height	Pitch		Length*	C	C_0	M_A		M_B		M_C	LM block	LM rail
	W_1 ±0.05	W_2	M_1	F	$d_1 \times d_2 \times h$	Max	kN	kN	1 block	Double blocks	1 block	Double blocks	1 block	kg	kg/m
	15	24	15	60	4.5×7.5×5.3	3000 (1240)	10.9	15.7	0.0945	0.527	0.0945	0.527	0.0998	0.18	1.5
	20	31.5	18	60	6×9.5×8.5	3000 (1480)	19.8	27.4	0.218	1.2	0.218	1.2	0.235	0.25	2.3
	23	35	22	60	7×11×9	3000 (2020)	27.6	36.4	0.324	1.8	0.324	1.8	0.366	0.54	3.3
	28	43.5	26	80	9×14×12	3000 (2520)	40.5	53.7	0.599	3.1	0.599	3.1	0.652	0.9	4.8
	34	51.5	29	80	9×14×12	3000 (2520)	53.9	70.2	0.895	4.51	0.895	4.51	1.05	1.5	6.6
	45	65	38	105	14×20×17	3090	82.2	101	1.5	8.37	1.5	8.37	1.94	2.6	11
	53	76	44	120	16×23×20	3060	121	146	2.6	14.1	2.6	14.1	3.43	4.3	15.1
	63	93	53	150	18×26×22	3000	195	228	5.08	25	5.08	25	6.2	7.3	22.5

Note) The maximum length under "Length*" indicates the standard maximum length of an LM rail. (See A1-202 .)
Static permissible moment* 1 block: the static permissible moment with one LM block
Double blocks: static permissible moment when two LM blocks are in close contact with each other
Total block length L : The total block length L shown in the table is the length with the dust proof parts, code UU or SS. If other contamination protection accessories or lubricant equipment are installed, the total block length will increase.
(See A1-472 or A1-492)
The M in the model number symbol indicates that the LM block, LM rail and balls are made of stainless steel.
The stainless steel provides excellent corrosion and environmental resistance.

Models HSR-CA, HSR-CAM, HSR-HA and HSR-HAM

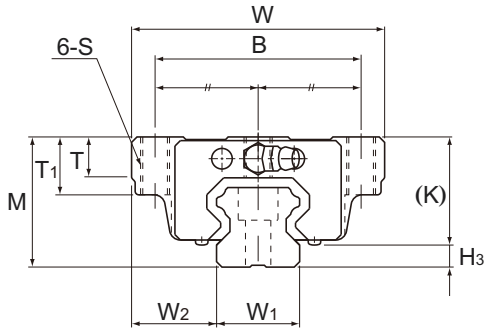

Models HSR20 to 35CA/HA/CAM/HAM

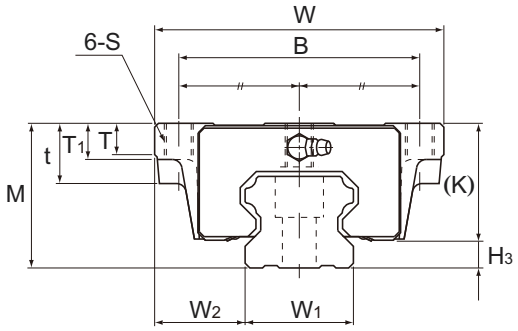

Models HSR45 to 85CA/HA

Model No.	Outer dimensions			LM block dimensions											
	Height M	Width W	Length L	B	C	S	L_1	t	T	T_1	K	N	E	Grease nipple	H_3
HSR 20CA HSR 20CAM	30	63	74	53	40	M6	50.8	—	9.5	10	26	5	12	B-M6F	4
HSR 20HA HSR 20HAM	30	63	90	53	40	M6	66.8	—	9.5	10	26	5	12	B-M6F	4
HSR 25CA HSR 25CAM	36	70	83.1	57	45	M8	59.5	—	11	16	30.5	6	12	B-M6F	5.5
HSR 25HA HSR 25HAM	36	70	102.2	57	45	M8	78.6	—	11	16	30.5	6	12	B-M6F	5.5
HSR 30CA HSR 30CAM	42	90	98	72	52	M10	70.4	—	9	18	35	7	12	B-M6F	7
HSR 30HA HSR 30HAM	42	90	120.6	72	52	M10	93	—	9	18	35	7	12	B-M6F	7
HSR 35CA HSR 35CAM	48	100	109.4	82	62	M10	80.4	—	12	21	40.5	8	12	B-M6F	7.5
HSR 35HA HSR 35HAM	48	100	134.8	82	62	M10	105.8	—	12	21	40.5	8	12	B-M6F	7.5
HSR 45CA HSR 45HA	60	120	139 170.8	100	80	M12	98 129.8	25	13	15	50	10	16	B-PT1/8	10
HSR 55CA HSR 55HA	70	140	163 201.1	116	95	M14	118 156.1	29	13.5	17	57	11	16	B-PT1/8	13
HSR 65CA HSR 65HA	90	170	186 245.5	142	110	M16	147 206.5	37	21.5	23	76	19	16	B-PT1/8	14
HSR 85CA HSR 85HA	110	215	245.6 303	185	140	M20	178.6 236	55	28	30	94	23	16	B-PT1/8	16

Model number coding

HSR25 HA 2 QZ KKHH C0 M +1300L P T M - II

- HSR25: Model number
- HA: Type of LM block
- 2: No. of LM blocks used on the same rail
- QZ: With QZ Lubricator
- KKHH: Contamination protection accessory symbol (*1)
- C0: Radial clearance symbol (*2)
  - Normal (No symbol)
  - Light preload (C1)
  - Medium preload (C0)
- M: Stainless steel LM block
- +1300L: LM rail length (in mm)
- P: Accuracy symbol (*3)
  - Normal grade (No Symbol)
  - High accuracy grade (H)
  - Precision grade (P)
  - Super precision grade (SP)
  - Ultra precision grade (UP)
- T: Symbol for LM rail jointed use
- M: Stainless steel LM rail
- II: Symbol for No. of rails used on the same plane (*4)

(*1) See contamination protection accessory on A1-496 . (*2) See A1-71 . (*3) See A1-76 . (*4) See A1-13 .

Note) This model number indicates that a single-rail unit constitutes one set. (i.e., required number of sets when 2 rails are used in parallel is 2 at a minimum.)
Those models equipped with QZ Lubricator cannot have a grease nipple. When desiring a grease nipple for a model attached with QZ, contact THK.

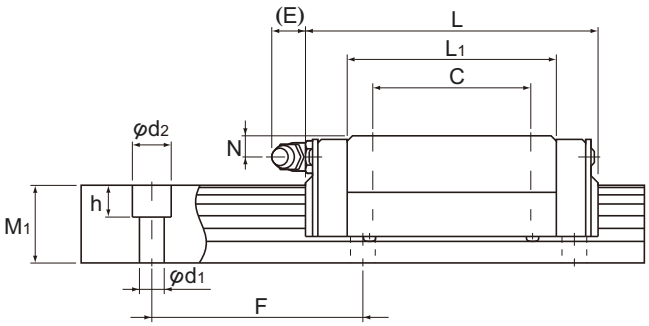

Unit: mm

	LM rail dimensions						Basic load rating		Static permissible moment kN-m*					Mass	
	Width		Height	Pitch		Length*	C	C_0	M_A		M_B		M_C	LM block	LM rail
	W_1 ±0.05	W_2	M_1	F	$d_1 \times d_2 \times h$	Max	kN	kN	1 block	Double blocks	1 block	Double blocks	1 block	kg	kg/m
	20	21.5	18	60	6×9.5×8.5	3000 (1480)	19.8	27.4	0.218	1.2	0.218	1.2	0.235	0.35	2.3
	20	21.5	18	60	6×9.5×8.5	3000 (1480)	23.9	35.8	0.363	1.87	0.363	1.87	0.307	0.47	2.3
	23	23.5	22	60	7×11×9	3000 (2020)	27.6	36.4	0.324	1.8	0.324	1.8	0.366	0.59	3.3
	23	23.5	22	60	7×11×9	3000 (2020)	35.2	51.6	0.627	3.04	0.627	3.04	0.518	0.75	3.3
	28	31	26	80	9×14×12	3000 (2520)	40.5	53.7	0.599	3.1	0.599	3.1	0.652	1.1	4.8
	28	31	26	80	9×14×12	3000 (2520)	48.9	70.2	0.995	4.89	0.995	4.89	0.852	1.3	4.8
	34	33	29	80	9×14×12	3000 (2520)	53.9	70.2	0.895	4.51	0.895	4.51	1.05	1.6	6.6
	34	33	29	80	9×14×12	3000 (2520)	65	91.7	1.49	7.13	1.49	7.13	1.37	2	6.6
	45	37.5	38	105	14×20×17	3090	82.2 100	101 135	1.5 2.59	8.37 13.4	1.5 2.59	8.37 13.4	1.94 2.6	2.8 3.3	11
	53	43.5	44	120	16×23×20	3060	121 148	146 194	2.6 4.46	14.1 22.7	2.6 4.46	14.1 22.7	3.43 4.56	4.5 5.7	15.1
	63	53.5	53	150	18×26×22	3000	195 249	228 323	5.08 9.81	25 45.6	5.08 9.81	25 45.6	6.2 8.79	8.5 10.7	22.5
	85	65	65	180	24×35×28	3000	304 367	355 464	10.2 16.9	51.2 81	10.2 16.9	51.2 81	12.8 16.7	17 23	35.2

Note) The maximum length under "Length*" indicates the standard maximum length of an LM rail. (See A1-202 .)
Static permissible moment* 1 block: the static permissible moment with one LM block
Double blocks: static permissible moment when two LM blocks are in close contact with each other
Total block length L : The total block length L shown in the table is the length with the dust proof parts, code UU or SS. If other contamination protection accessories or lubricant equipment are installed, the total block length will increase.
(See A1-472 or A1-492)
The M in the model number symbol indicates that the LM block, LM rail and balls are made of stainless steel.
The stainless steel provides excellent corrosion and environmental resistance.

Models HSR-CB, HSR-CBM, HSR-HB and HSR-HBM

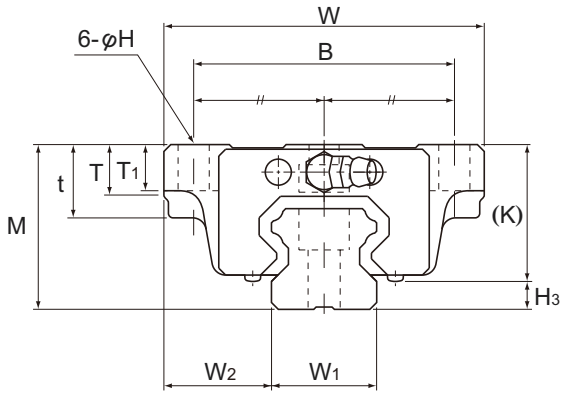

Model No.	Outer dimensions			LM block dimensions											
	Height M	Width W	Length L	B	C	H	L_1	t	T	T_1	K	N	E	Grease nipple	H_3
HSR 20CB HSR 20CBM	30	63	74	53	40	6	50.8	10	9.5	10	26	5	12	B-M6F	4
HSR 20HB HSR 20HBM	30	63	90	53	40	6	66.8	10	9.5	10	26	5	12	B-M6F	4
HSR 25CB HSR 25CBM	36	70	83.1	57	45	7	59.5	16	11	10	30.5	6	12	B-M6F	5.5
HSR 25HB HSR 25HBM	36	70	102.2	57	45	7	78.6	16	11	10	30.5	6	12	B-M6F	5.5
HSR 30CB HSR 30CBM	42	90	98	72	52	9	70.4	18	9	10	35	7	12	B-M6F	7
HSR 30HB HSR 30HBM	42	90	120.6	72	52	9	93	18	9	10	35	7	12	B-M6F	7
HSR 35CB HSR 35CBM	48	100	109.4	82	62	9	80.4	21	12	13	40.5	8	12	B-M6F	7.5
HSR 35HB HSR 35HBM	48	100	134.8	82	62	9	105.8	21	12	13	40.5	8	12	B-M6F	7.5
HSR 45CB HSR 45HB	60	120	139 170.8	100	80	11	98 129.8	25	13	15	50	10	16	B-PT1/8	10
HSR 55CB HSR 55HB	70	140	163 201.1	116	95	14	118 156.1	29	13.5	17	57	11	16	B-PT1/8	13
HSR 65CB HSR 65HB	90	170	186 245.5	142	110	16	147 206.5	37	21.5	23	76	19	16	B-PT1/8	14
HSR 85CB HSR 85HB	110	215	245.6 303	185	140	18	178.6 236	55	28	30	94	23	16	B-PT1/8	16

Model number coding

HSR35 CB 2 QZ ZZHH C0 M +1400L P T M - II

- HSR35: Model number
- CB: Type of LM block
- 2: No. of LM blocks used on the same rail
- QZ: With QZ Lubricator
- ZZHH: Contamination protection accessory symbol (*1)
- C0: Radial clearance symbol (*2)
  - Normal (No symbol)
  - Light preload (C1)
  - Medium preload (C0)
- M: Stainless steel LM block
- +1400L: LM rail length (in mm)
- P: Accuracy symbol (*3)
  - Normal grade (No Symbol)
  - High accuracy grade (H)
  - Precision grade (P)
  - Super precision grade (SP)
  - Ultra precision grade (UP)
- T: Symbol for LM rail jointed use
- M: Stainless steel LM rail
- II: Symbol for No. of rails used on the same plane (*4)

(*1) See contamination protection accessory on A1-496 . (*2) See A1-71 . (*3) See A1-76 . (*4) See A1-13 .

Note) This model number indicates that a single-rail unit constitutes one set. (i.e., required number of sets when 2 rails are used in parallel is 2 at a minimum.)
Those models equipped with QZ Lubricator cannot have a grease nipple. When desiring a grease nipple for a model attached with QZ, contact THK.

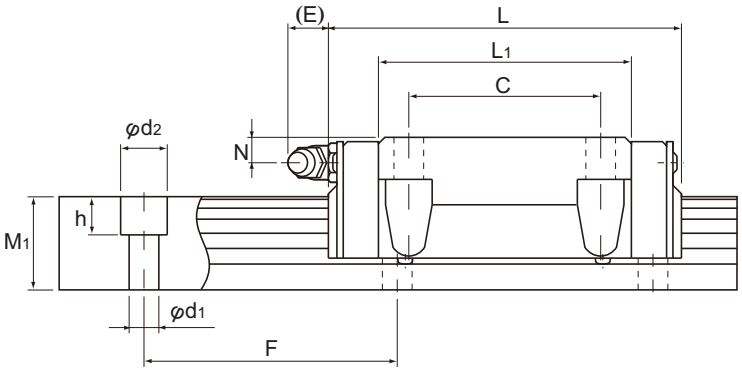

Unit: mm

	LM rail dimensions						Basic load rating		Static permissible moment kN-m*					Mass	
	Width		Height	Pitch		Length*	C	C_0	M_A		M_B		M_C	LM block	LM rail
	W_1 ±0.05	W_2	M_1	F	$d_1 \times d_2 \times h$	Max	kN	kN	1 block	Double blocks	1 block	Double blocks	1 block	kg	kg/m
	20	21.5	18	60	6×9.5×8.5	3000 (1480)	19.8	27.4	0.218	1.2	0.218	1.2	0.235	0.35	2.3
	20	21.5	18	60	6×9.5×8.5	3000 (1480)	23.9	35.8	0.363	1.87	0.363	1.87	0.307	0.47	2.3
	23	23.5	22	60	7×11×9	3000 (2020)	27.6	36.4	0.324	1.8	0.324	1.8	0.366	0.59	3.3
	23	23.5	22	60	7×11×9	3000 (2020)	35.2	51.6	0.627	3.04	0.627	3.04	0.518	0.75	3.3
	28	31	26	80	9×14×12	3000 (2520)	40.5	53.7	0.599	3.1	0.599	3.1	0.652	1.1	4.8
	28	31	26	80	9×14×12	3000 (2520)	48.9	70.2	0.995	4.89	0.995	4.89	0.852	1.3	4.8
	34	33	29	80	9×14×12	3000 (2520)	53.9	70.2	0.895	4.51	0.895	4.51	1.05	1.6	6.6
	34	33	29	80	9×14×12	3000 (2520)	65	91.7	1.49	7.13	1.49	7.13	1.37	2	6.6
	45	37.5	38	105	14×20×17	3090	82.2 100	101 135	1.5 2.59	8.37 13.4	1.5 2.59	8.37 13.4	1.94 2.6	2.8 3.3	11
	53	43.5	44	120	16×23×20	3060	121 148	146 194	2.6 4.46	14.1 22.7	2.6 4.46	14.1 22.7	3.43 4.56	4.5 5.7	15.1
	63	53.5	53	150	18×26×22	3000	195 249	228 323	5.08 9.81	25 45.6	5.08 9.81	25 45.6	6.2 8.79	8.5 10.7	22.5
	85	65	65	180	24×35×28	3000	304 367	355 464	10.2 16.9	51.2 81	10.2 16.9	51.2 81	12.8 16.7	17 23	35.2

Note) The maximum length under "Length*" indicates the standard maximum length of an LM rail. (See A1-202 .)
Static permissible moment* 1 block: the static permissible moment with one LM block
Double blocks: static permissible moment when two LM blocks are in close contact with each other
Total block length L : The total block length L shown in the table is the length with the dust proof parts, code UU or SS. If other contamination protection accessories or lubricant equipment are installed, the total block length will increase.
(See A1-472 or A1-492)
The M in the model number symbol indicates that the LM block, LM rail and balls are made of stainless steel.
The stainless steel provides excellent corrosion and environmental resistance.

Models HSR-HA, HSR-HB and HSR-HR

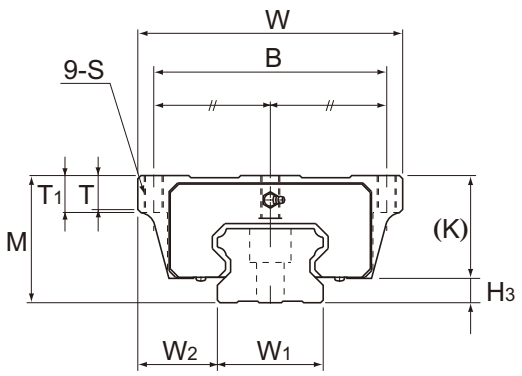

Models HSR100 to 150HA

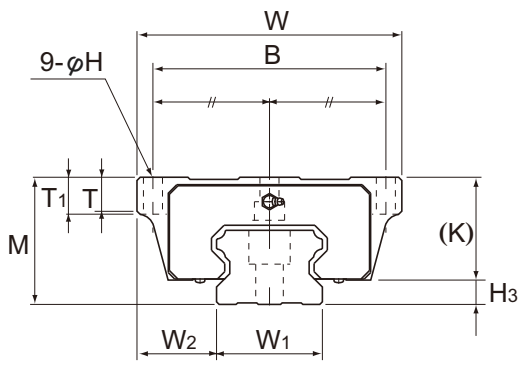

Models HSR100 to 150HB

Model No.	Outer dimensions			LM block dimensions												
	Height M	Width W	Length L	B	C	H	S×ℓ	L_1	T	T_1	K	N	E	Grease nipple	H_3
HSR 100HA	120	250	334	220	200	—	M18*	261	32	35	100	23	16	B-PT1/4	20
HSR 100HB		250		220		20	—		32	35					
HSR 100HR		200		130		—	M18×27		33	—					
HSR 120HA	130	290	365	250	210	—	M20*	287	34	38	110	26.5	16	B-PT1/4	20
HSR 120HB		290		250		22	—		34	38					
HSR 120HR		220		146		—	M20×30		33.7	—					
HSR 150HA	145	350	396	300	230	—	M24*	314	36	40	123	29	16	B-PT1/4	22
HSR 150HB		350		300		26	—		36	40					
HSR 150HR		266		180		—	M24×35		33	—					

Note) "*" indicates a through hole.

Model number coding

HSR150 HR 2 UU C1 +2350L H T - II

- HSR150: Model number
- HR: Type of LM block
- 2: No. of LM blocks used on the same rail
- UU: Contamination protection accessory symbol (*1)
- C1: Radial clearance symbol (*2)
  - Normal (No symbol)
  - Light preload (C1)
  - Medium preload (C0)
- +2350L: LM rail length (in mm)
- H: Accuracy symbol (*3)
  - Normal grade (No Symbol)/High accuracy grade (H)
  - Precision grade (P)/Super precision grade (SP)
  - Ultra precision grade (UP)
- T: Symbol for LM rail jointed use
- II: Symbol for No. of rails used on the same plane (*4)

(*1) See contamination protection accessory on A1-496 . (*2) See A1-71 . (*3) See A1-76 . (*4) See A1-13 .

Note) This model number indicates that a single-rail unit constitutes one set. (i.e., required number of sets when 2 rails are used in parallel is 2 at a minimum.)

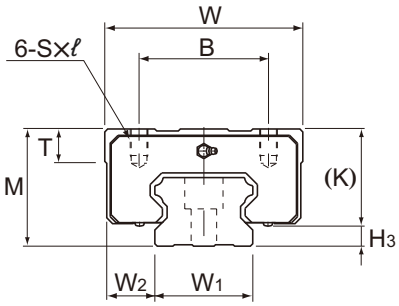

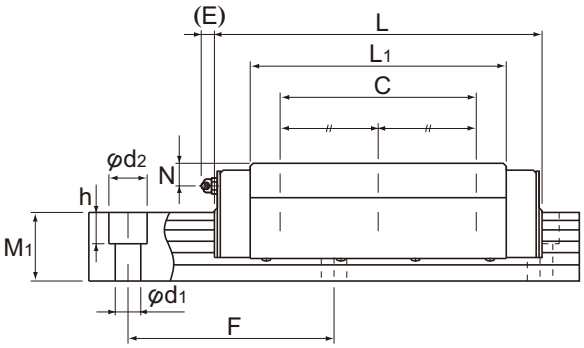

Models HSR100 to 150HR

Unit: mm

	LM rail dimensions						Basic load rating		Static permissible moment kN-m*					Mass	
	Width		Height	Pitch		Length*	C	C_0	M_A		M_B		M_C	LM block	LM rail
	W_1 ±0.05	W_2	M_1	F	$d_1 \times d_2 \times h$	Max	kN	kN	1 block	Double blocks	1 block	Double blocks	1 block	kg	kg/m
	100	75 75 50	70	210	26×39×32	3000	441	540	20.7	105	20.7	105	24.1	32	49
	114	88 88 53	75	230	33×48×43	3000	540	653	27.5	138	27.5	138	33.3	43	61
	144	103 103 61	85	250	39×58×46	3000	518	728	33.6	167	33.6	167	45.2	62	87

Note) The maximum length under "Length*" indicates the standard maximum length of an LM rail. (See A1-202 .)
Static permissible moment* 1 block: the static permissible moment with one LM block
Double blocks: static permissible moment when two LM blocks are in close contact with each other
Total block length L : The total block length L shown in the table is the length with the dust proof parts, code UU or SS. If other contamination protection accessories or lubricant equipment are installed, the total block length will increase.
(See A1-472 or A1-492)

Standard Length and Maximum Length of the LM Rail

Table1 shows the standard lengths and the maximum lengths of model HSR variations. If the maximum length of the desired LM rail exceeds them, jointed rails will be used. Contact THK for details. For the G dimension when a special length is required, we recommend selecting the corresponding G value from the table. The longer the G dimension is, the less stable the G area may become after installation, thus causing an adverse impact to accuracy.

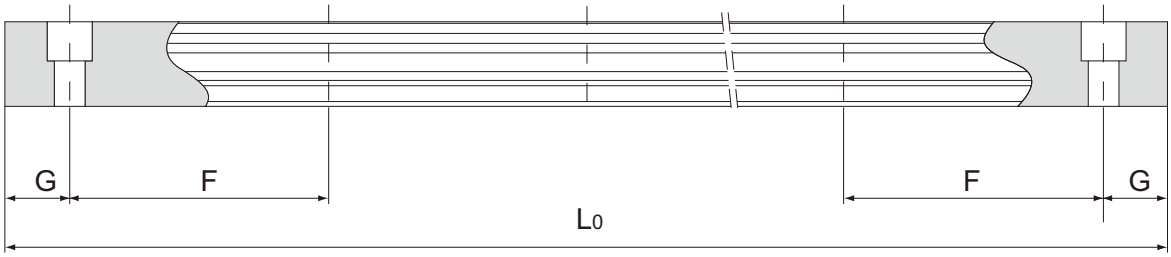

Table1 Standard Length and Maximum Length of the LM Rail for Model HSR

Unit: mm

Model No.	HSR 8	HSR 10	HSR 12	HSR 15	HSR 20	HSR 25	HSR 30	HSR 35	HSR 45	HSR 55	HSR 65	HSR 85	HSR 100	HSR 120	HSR 150
LM rail standard length (L_0)	35	45	70	160	160	220	280	280	570	780	1270	1530	1340	1470	1600
	55	70	110	220	220	280	360	360	675	900	1570	1890	1760	1930	2100
	75	95	150	280	280	340	440	440	780	1020	2020	2250	2180	2390	2350
	95	120	190	340	340	400	520	520	885	1140	2620	2610	2600		
	115	145	230	400	400	460	600	600	990	1260					
	135	170	270	460	460	520	680	680	1095	1380					
	155	195	310	520	520	580	760	760	1200	1500					
	175	220	350	580	580	640	840	840	1305	1620					
	195	245	390	640	640	700	920	920	1410	1740					
	215	270	430	700	700	760	1000	1000	1515	1860					
	235	295	470	760	760	820	1080	1080	1620	1980					
	255	320	510	820	820	940	1160	1160	1725	2100					
	275	345	550	940	940	1000	1240	1240	1830	2220					
		370	590	1000	1000	1060	1320	1320	1935	2340					
		395	630	1060	1060	1120	1400	1400	2040	2460					
		420	670	1120	1120	1180	1480	1480	2145	2580					
		445		1180	1180	1240	1560	1560	2250	2700					
		470		1240	1240	1300	1640	1640	2355	2820					
				1360	1360	1360	1720	1720	2460	2940					
				1480	1480	1420	1800	1800	2565	3060					
				1600	1600	1480	1880	1880	2670						
					1720	1540	1960	1960	2775						
					1840	1600	2040	2040	2880						
					1960	1720	2200	2200	2985						
					2080	1840	2360	2360	3090						
					2200	1960	2520	2520							
						2080	2680	2680							
						2200	2840	2840							
						2320	3000	3000							
						2440									
Standard pitch F	20	25	40	60	60	60	80	80	105	120	150	180	210	230	250
G	7.5	10	15	20	20	20	20	20	22.5	30	35	45	40	45	50
Max length	(975)	(995)	(1240)	3000 (1240)	3000 (1480)	3000 (2020)	3000 (2520)	3000 (2520)	3090	3060	3000	3000	3000	3000	3000

Note1) The maximum length varies with accuracy grades. Contact THK for details.
Note2) If jointed rails are not allowed and a greater length than the maximum values above is required, contact THK.
Note3) The fi gures in the parentheses indicate the maximum lengths of stainless steel made models.

Tapped-hole LM Rail Type of Model HSR

HSR model rails also include a type where the LM rail is tapped from the bottom. This type is useful when mounting from the bottom of the base and when increased contamination protection is desired.

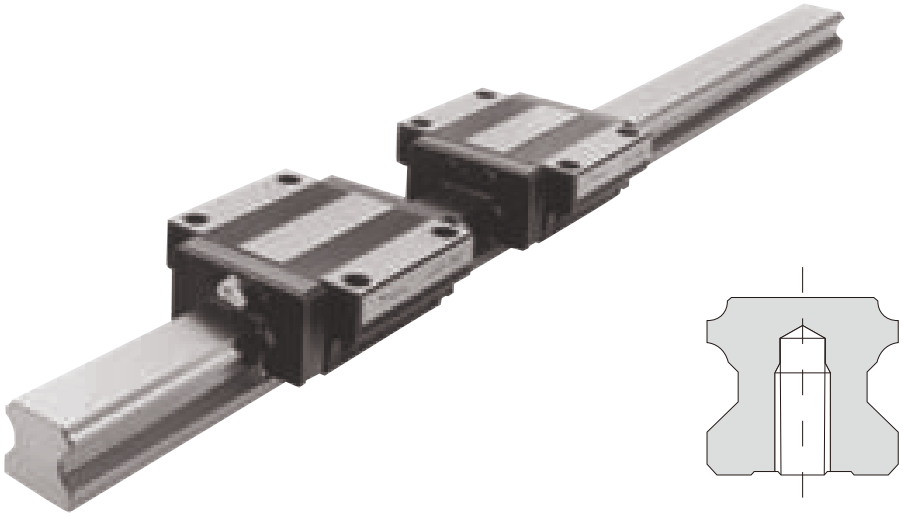

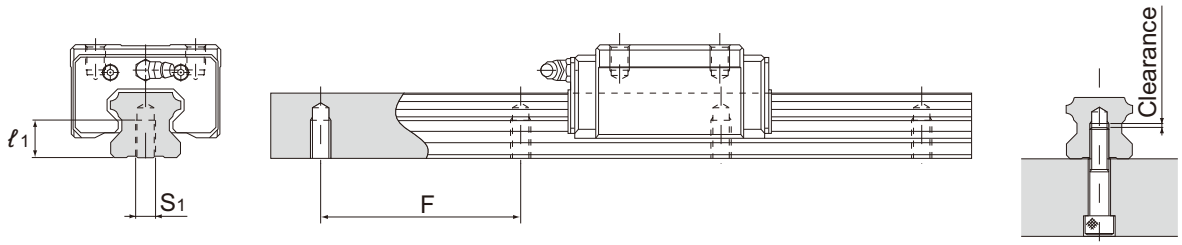

(1) Determine the bolt length so that a clearance of 2 to 5 mm is secured between the bolt end and the bottom of the tap (effective tap depth). (See figure above.)
(2) A tapped-hole LM rail type is available also for model HSR-YR.
(3) For standard pitches of the taps, see Table1 on A 1-202 .

Table2 Dimensions of the LM Rail Tap

Unit: mm

Model No.	S_1	Effective tap depth ℓ_1
HSR 15	M5	8
HSR 20	M6	10
HSR 25	M6	12
HSR 30	M8	15
HSR 35	M8	17
HSR 45	M12	24
HSR 55	M14	24
HSR 65	M20	30

Model number coding

HSR30A2UU +1000LH K

Symbol for tapped-hole LM rail type

Prevention of LM block from falling off of LM rail

In miniature model HSR, the balls fall out if the LM block comes off the LM rail.
For this reason, LM Guide assemblies are delivered with a part which prevents the LM block from coming off the rail. If you remove this part when using the product, please take precautions to avoid overrunning the blocks off of the rail.

Greasing Hole

[Greasing Hole for Model HSR]

The Model HSR LM block can be greased from the side or top surface. In order to prevent foreign material from entering the LM block, greasing holes are not through holes in blocks with regular specifi cations. Contact THK if these will be used.
In addition, contact THK if you will use an upper surface greasing hole with a Model HSR-R, HSR-XR, HSR-LR, or HSR-XLR, as a lubrication adapter is required.
The lubricant may not reach the raceway if the LM Guide is not installed in a horizontal orientation.
Be sure to let THK know the mounting orientation and the position where the grease nipple or plumbing fi xture will be attached to each LM block.
See A1-12 for the mounting orientation and A24-2 for lubrication.

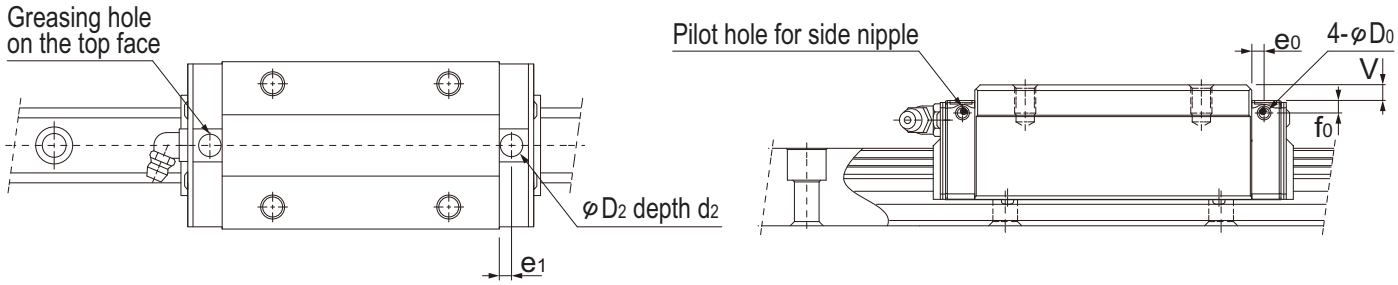

Unit: mm

Model No.		Pilot hole for side nipple			Applicable nipple	Greasing hole on the top face				
		e_0	f_0	D_0		D_2	(O-ring)	V	e_1	d_2
HSR	15C 15LC 15A 15B	3.2	7.9	3	PB107	5.1	SS4	0.3	3.2	0.65
	15R 15LR	3.2	7.9	3				4.3		
	20C 20LC 20A 20LA 20B 20LB	3.1	3.4	3		6	SS5	0.2	4.3	0.6
	20R 20LR	3.1	3.4	3				0.2		
	25C 25LC 25A 25LA 25B 25LB	3.5	4	3		6.2	P3	0.4	3.9	1
	25R 25LR	3.5	8	3				4.4		

Model No.		Pilot hole for side nipple			Applicable nipple	Greasing hole on the top face				
		e_0	f_0	D_0		D_2	(O-ring)	V	e_1	d_2
HSR	30C 30LC 30A 30LA 30B 30LB	5.2	6.2	5.2	M6F	6.2	P3	0.4	5.2	1
	30R 30LR	5.2	9.2	5.2				3.4		
	35C 35LC 35A 35LA 35B 35LB	5.5	5.6	5.2		6.2	P3	0.4	5.5	1
	35R 35LR	5.5	12.6	5.2				7.4		
	45C 45LC 45A 45LA 45B 45LB	6.1	6.6	5.2		10.2	P7	0.4	8.2	1
	45R 45LR	6.1	16.6	5.2				10.4		
	55C 55LC 55A 55LA 55B 55LB	5.6	7.7	5.2		10.2	P7	0.4	9.1	1
	55R 55LR	5.6	17.7	5.2				10.4		
	65XC 65XLC	6.8	14.6	5.2		10.2	P7	5.9	9.5	1
	65XLR 65XLC	6.8	14.6	5.2				5.9		

*Upper surface lubrication is for oil lubrication only. Contact THK if you are considering using the greasing hole on the top face for grease lubrication.

[Semi-standard Greasing Hole for Model HSR]

For model HSR, a semi-standard greasing hole is available. Specify the appropriate model number according to the application.

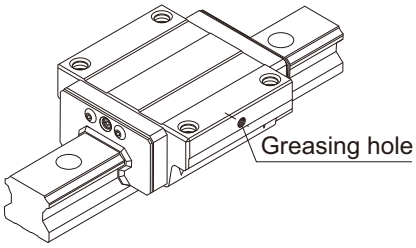

Type with a Greasing Hole Drilled on the Side Surface

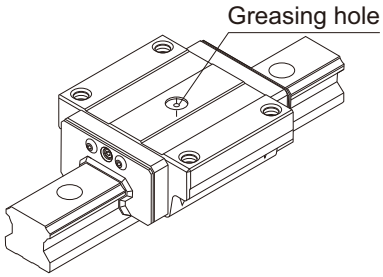

Type with a Greasing Hole Drilled on the Top Face